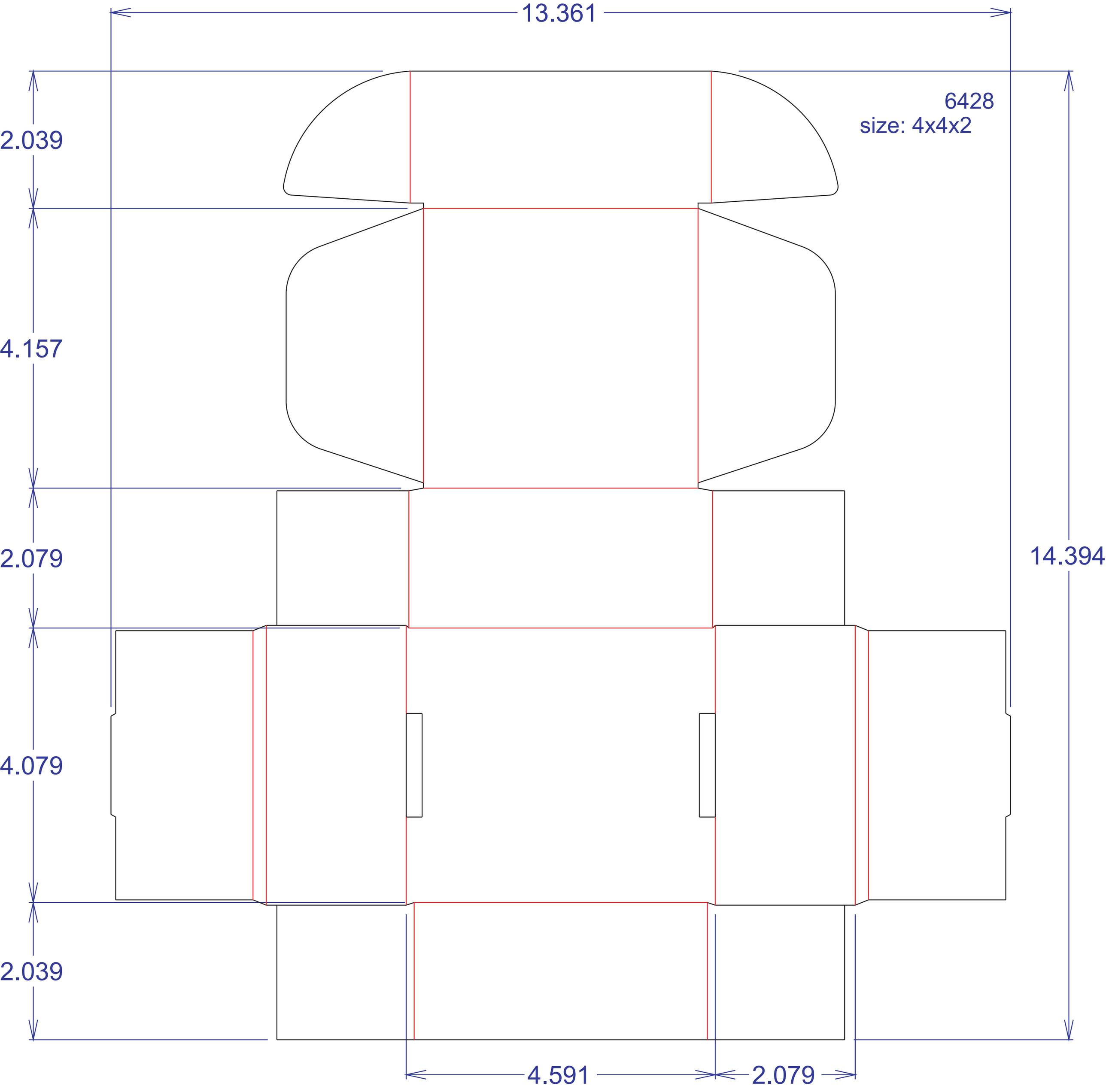
13.361
6428
size: 4x4x2
2.039
4.157
2.079
14.394
4.079
2.039
4.591
2.079